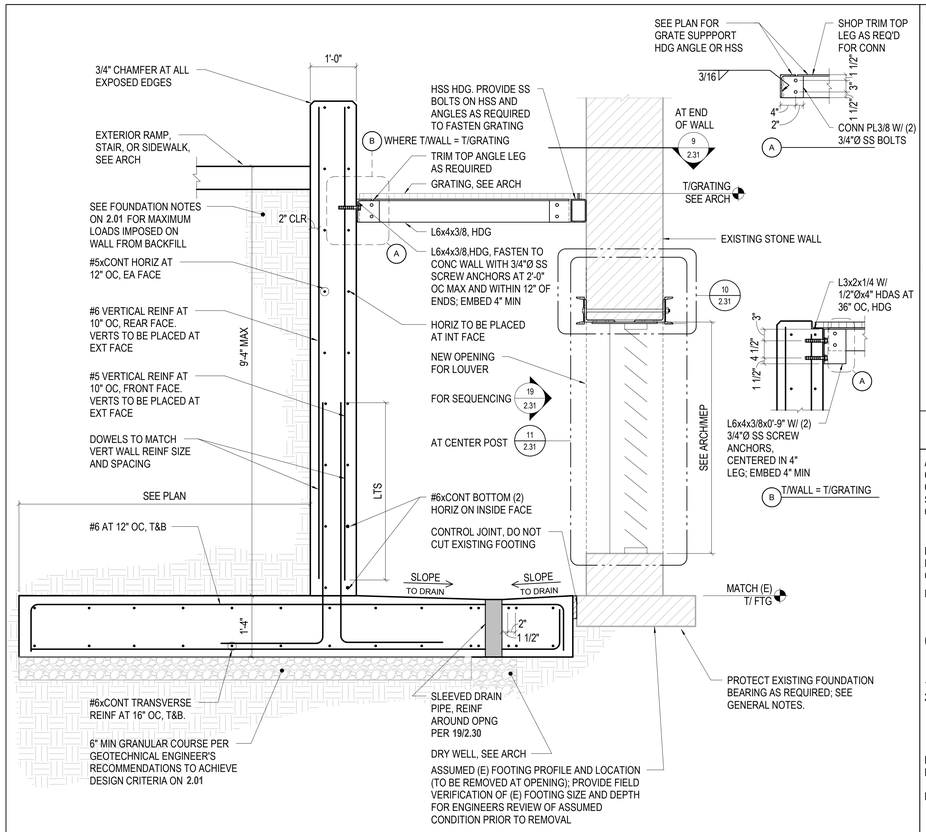

18 NO SCALE AREA WELL WALLS

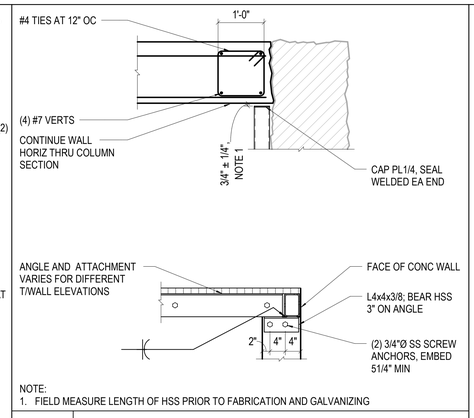

NOTE:
1. FIELD MEASURE LENGTH OF HSS PRIOR TO FABRICATION AND GALVANIZING

9 NO SCALE END OF AREA WELL WALL

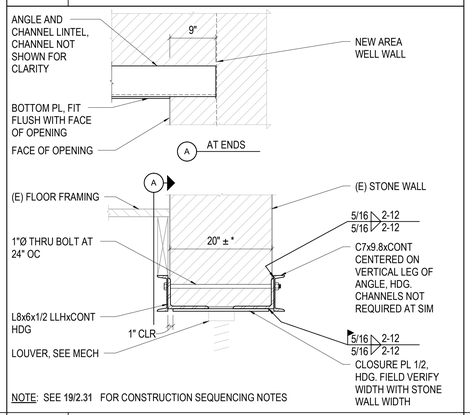

NOTE: SEE 19/2.31 FOR CONSTRUCTION SEQUENCING NOTES

10 NO SCALE RETRO-FIT LINTEL AT LOUVERS

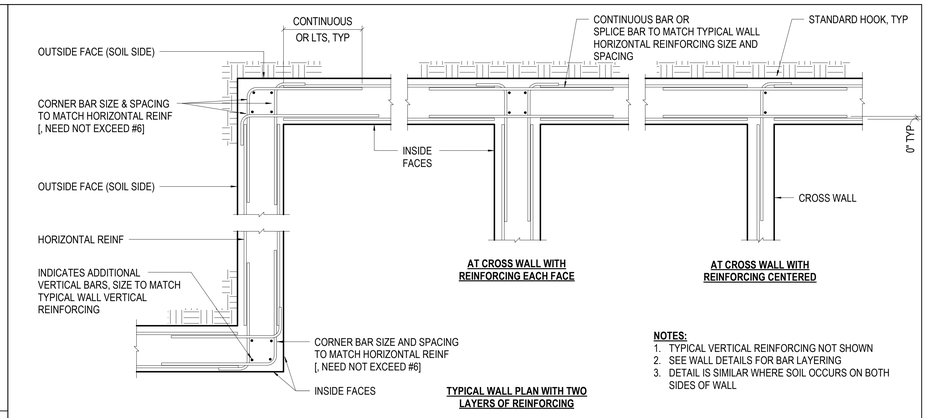

NOTE: AT CONTRACTOR'S OPTION, FORM SAVERS MAY BE USED AT CORNERS AND INTERSECTIONS FOR HORIZ REINF INSTEAD OF CORNER BARS

6 NO SCALE TYPICAL HORIZONTAL REINFORCING AT BASEMENT AND FOUNDATION WALLS

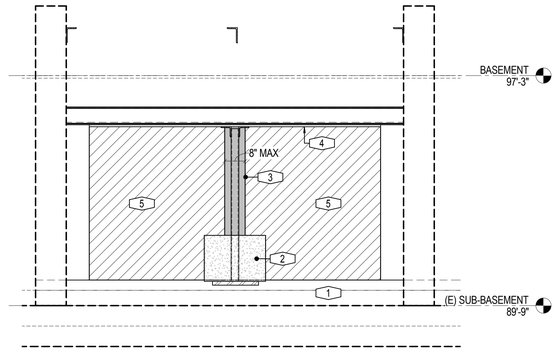

CONSTRUCTION SEQUENCING NOTES:
1. INSTALL MC CHANNELS, FORM AND POUR BEAMS ADJACENT TO (E) STONE WALL PER 11/2.31 (KEYNOTE 1).
2. AFTER THE BEAMS HAVE CURED FOR A MINIMUM OF 7 DAYS OR 75% OF DESIGN STRENGHTH, CUT A SMALL OPENING IN BOTTOM OF STONE TO INSERT BASE PLATE; 2'-0" HIGH AND 2'-6" WIDE MAXIMUM (KEYNOTE 2).
3. 'TOOTH' IN HSS POST & INSTALL PLATE UNDER CHANNEL/ ANGLE LINTEL. ATTACH ANGLES AND PLACE NON-SHRINK GROUT BETWEEN POST AND PLATE TO PROVIDE FULL BEARING ON PLATE (KEYNOTE 3).
4. CUT STONE AT TOP OF LOUVER OPENING JUST LARGE ENOUGH TO ENABLE INSTALLATION OF THE CHANNEL/ANGLE LINTEL. CUT ONE SIDE (INTERIOR OR EXTERIOR) AT AT TIME AND INSTALL ANGLES; ANGLES SHOULD STILL BEAR ON STONE BELOW (KEYNOTE 4).
5. REMOVE REMAINING STONE REQUIRED FOR LOUVER OPENING (KEYNOTE 5).

NOTE: THE INTENT OF THIS SEQUENCE OF CONSTRUCTIN IS TO KEEP SIMILAR AND CONTINUOUS LOADING ON THE (E) FOOTING AT ALL TIMES DURING THE CONSTRUCTION PROCESS. AT NO TIME SHALL LOAD BE DISTRIBUTED AND CONCENTRATED TO THE JAMBS OF THE LOUVER OPENINGS.

19 NO SCALE CONSTRUCTION SEQUENCING OF LOUVERS

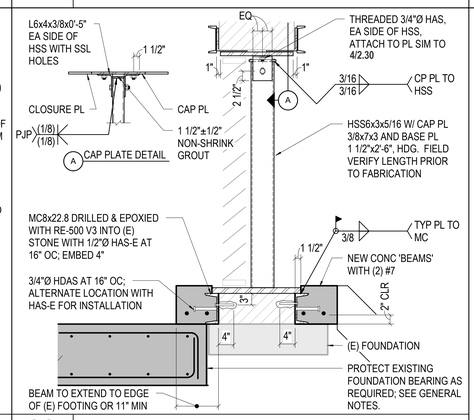

11 NO SCALE POST AT LOUVER

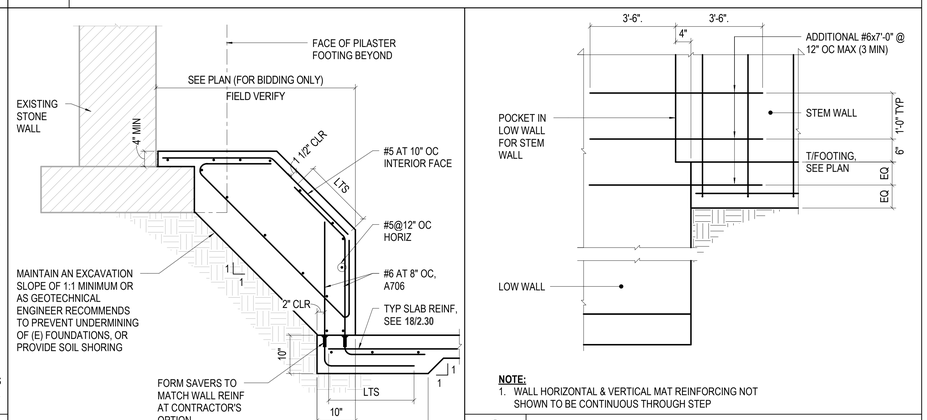

8 NO SCALE SUB-BASEMENT INT RETAINING WALL

3 NO SCALE STRIP FOOTING & WALL STEP

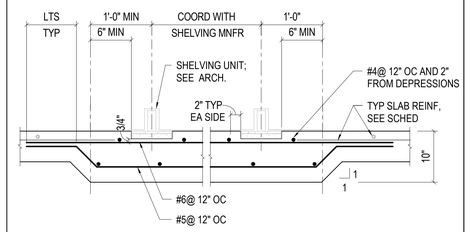

12 NO SCALE SLAB AT HIGH DENSITY STORAGE

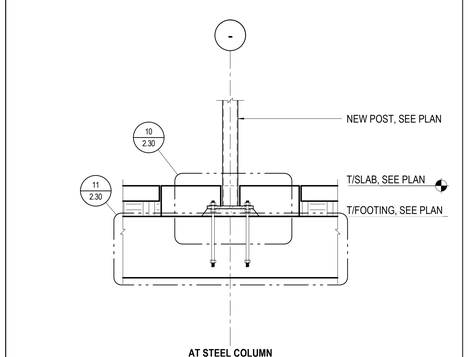

4 NO SCALE BASE OF COLS IN SUB-BASEMENT

Professional Engineer (Structural)
AMANDA N. MILLER
12591
Date 11/20/17
WYOMING

OLD STONEY REMODEL
PHASE ONE
108 NORTH 4TH STREET
SUNDANCE, WYOMING 82729

Stateline No. 7 ARCHITECTS
Copyright 2001 Stateline No. 7 Architects
307.733.2001
307.733.2002
307.690.4187
THESE DRAWINGS AND THE DESIGNS HERE ILLUSTRATED ARE THE PROPERTY OF STATELINE No. 7 ARCHITECTS AND MAY NOT BE REPRODUCED IN PART OR WHOLE WITHOUT EXPRESS WRITTEN PERMISSION OF STATELINE No. 7 ARCHITECTS. ©

MARTIN/MARTIN WYOMING
4020 LARAMIE STREET, CHEYENNE, WYOMING 82001
307.637.8422
MMWYO.COM

PROJECT
16-025

DATE
11/20/17

DRAWN
NAO

DISK

SHEET
SUB-BASEMENT DETAILS

SHEET
2.31